Toll Free: 888-905-1892
www.waterlinecontrols.com
Email: info@waterlinecontrols.com

NEW MORE RELIABLE TECHNOLOGY by Waterline Controls® FOR SPECIFYING ENGINEERS WITH A TESTED & PROVEN TRACK RECORD in MRO APPLICATIONS for 10+ years.

Our controls can REPLACE ALL SENSOR & CONTROL TYPES in ALL water based applications.

We ARE NOT similar to float switches, capacitive, conductive, ultrasonic, or pressure transducers.
We ARE more reliable, easy to operate, & last longer

Benefits:

- Permanently eliminate float switches
- Water quality does not matter
- Sensor will not plate, foul, or deteriorate
- Flexiblity in design to meet any scenario
- High-voltage is not near water
- Little to no maintenance
- Never needs recalibration
- Stand-alone controls
- Connections for BMS, BAS, or fire pannel
- Less than 1% failure rate in the field
- Limited lifetime warranty
- Fully Commercialized

Features:

- Dry contacts for BMS, BAS, or fire pannel
- Power relays for valves, pumps, etc.
- Intuitive LED indicators
- Optional temperature sensor controlled relay
- NEMA 4x control enclosure
- Controls can be mounted in equipment room w/ sensor wired remotely
- Intrinsically safe
- Color coded sensor rods & wires for intuitive installation
- Fully automated by microprocessor
- Push-button for relay test
- Only moving parts are replacable relays
- Modular construction

Waterline Controls
P.O. Box 12544 Scottsdale, Arizona 85260
Toll Free: 888-905-1892
Email: info@waterlinecontrols.com
www.waterlinecontrols.com

SUBMITTAL WLC 5300

FUNCTIONAL WIRING DIAGRAM OUTPUTS

Duplex Water Level Fill Control (Alternating on, all off) w/ Low Alarm

LED STATUS INDICATORS

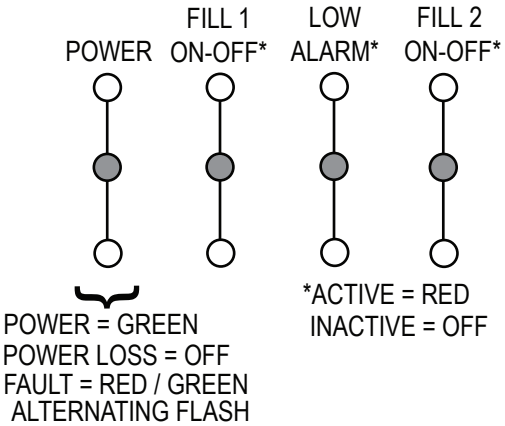

HIGH VOLTAGE POWER RELAY DRY CONTACTS

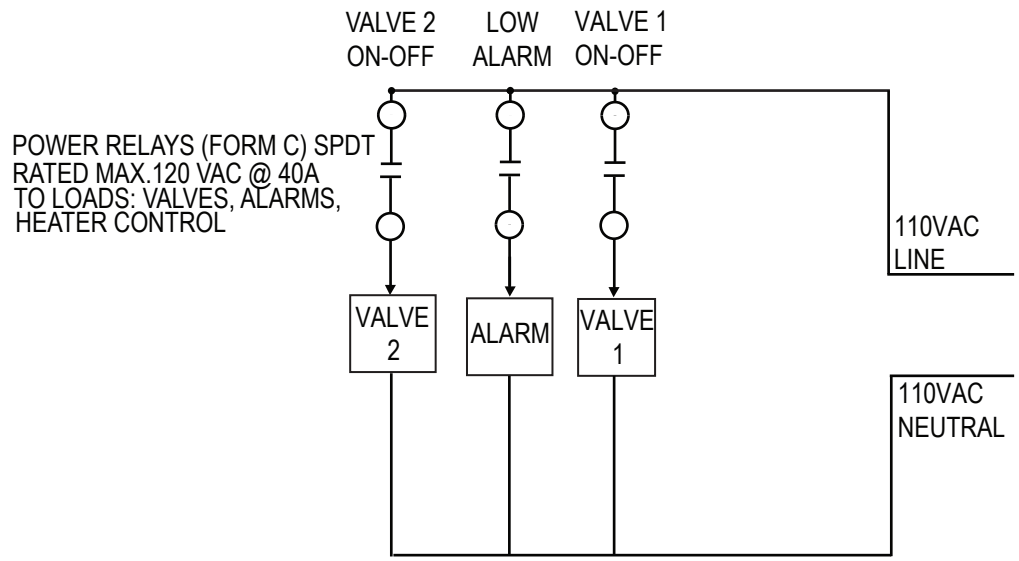

LOW VOLTAGE DRY CONTACTS TO BUILDING AUTOMATION

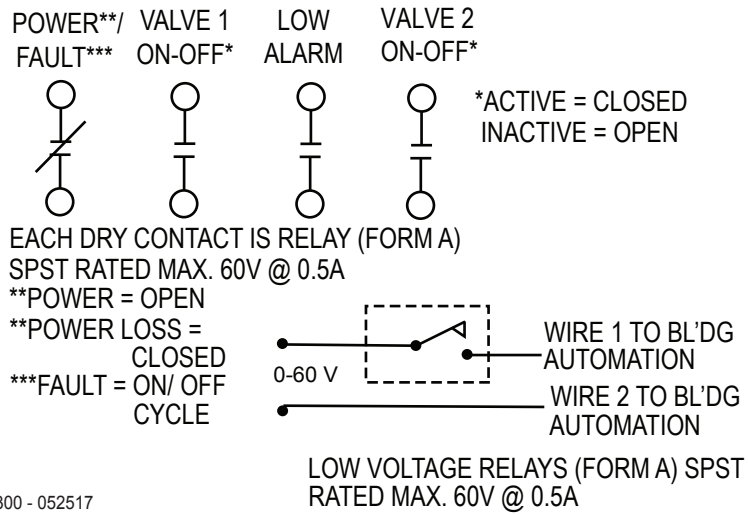

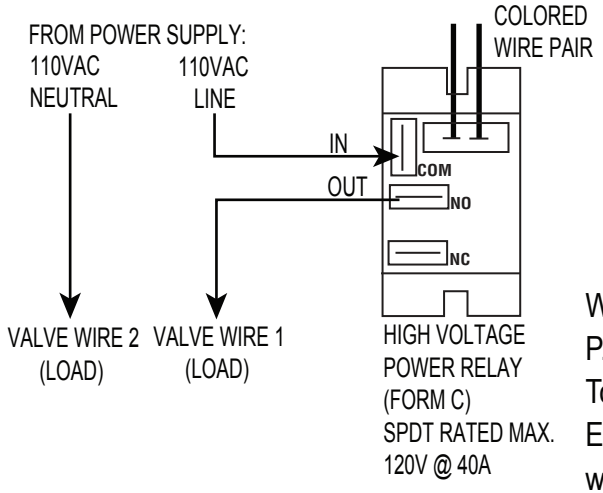

Waterline Controls
P.O. Box 12544 Scottsdale, Arizona 85260
Toll Free: 888-905-1892
Email: info@waterlinecontrols.com
www.waterlinecontrols.com

SUBMITTAL WLC 5300

Duplex Water Level Fill Control (Alternating on, all off) w/ Low Alarm

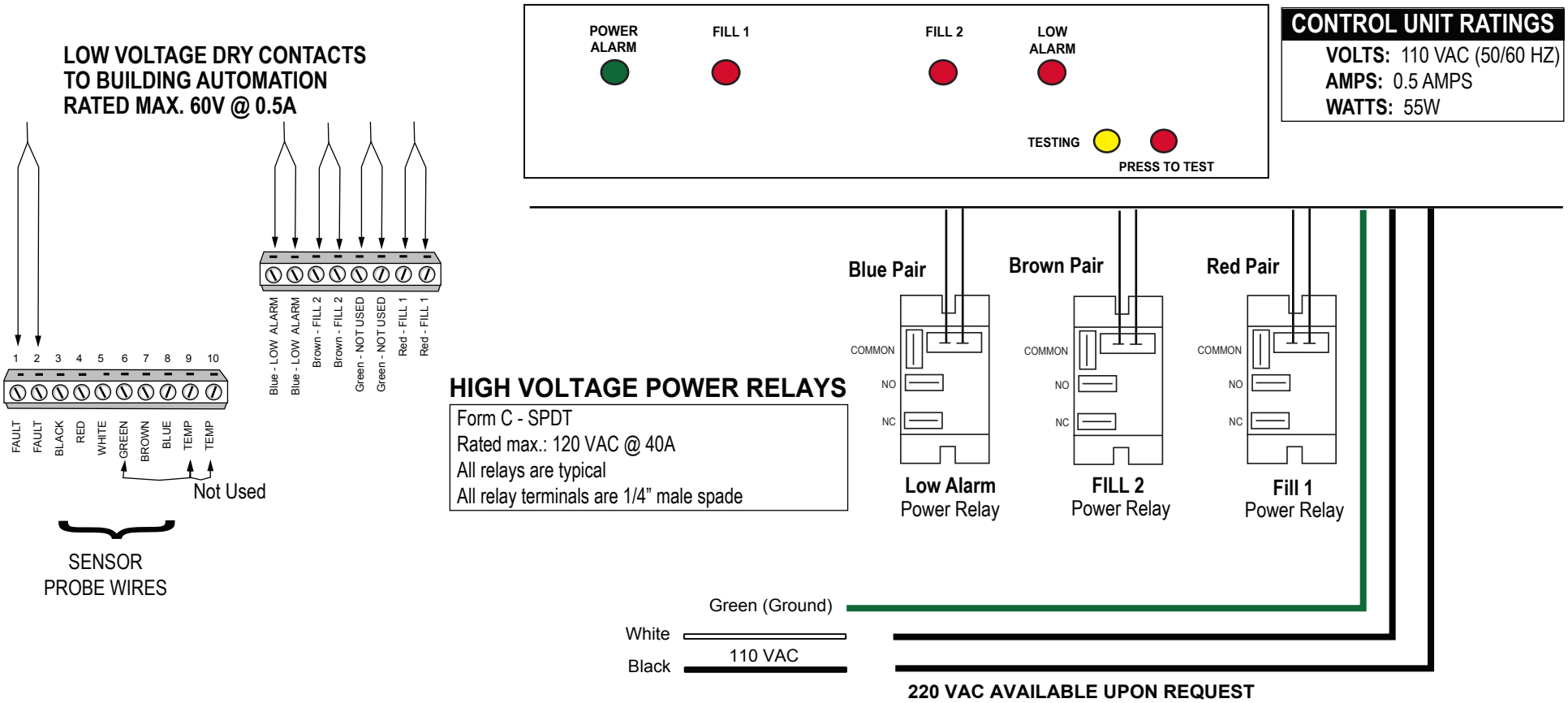

CONTROL UNIT RATINGS

VOLTS: 110 VAC (50/60 HZ)
AMPS: 0.5 AMPS
WATTS: 55W

HIGH VOLTAGE POWER RELAYS

Form C - SPDT
Rated max.: 120 VAC @ 40A
All relays are typical
All relay terminals are 1/4" male spade

PRODUCT FUNCTION TRUTH TABLE

MODEL	BMS DRY CONTACTS							POWER RELAY				
	FAULT	POWER LOSS	FILL 2	LOW ALARM	HIGH ALARM	FILL 1	BAS WIRES	FILL 2	LOW ALARM	HIGH ALARM	FILL 1	SELF TEST
WLC 5300	X	X	X	X		X	8	X	X		X	X

Waterline Controls
P.O. Box 12544 Scottsdale, Arizona 85260
Toll Free: 888-905-1892
Email: info@waterlinecontrols.com
www.waterlinecontrols.com

SUBMITTAL WLC 5300

Duplex Water Level Fill Control (Alternating on, all off) w/ Low Alarm

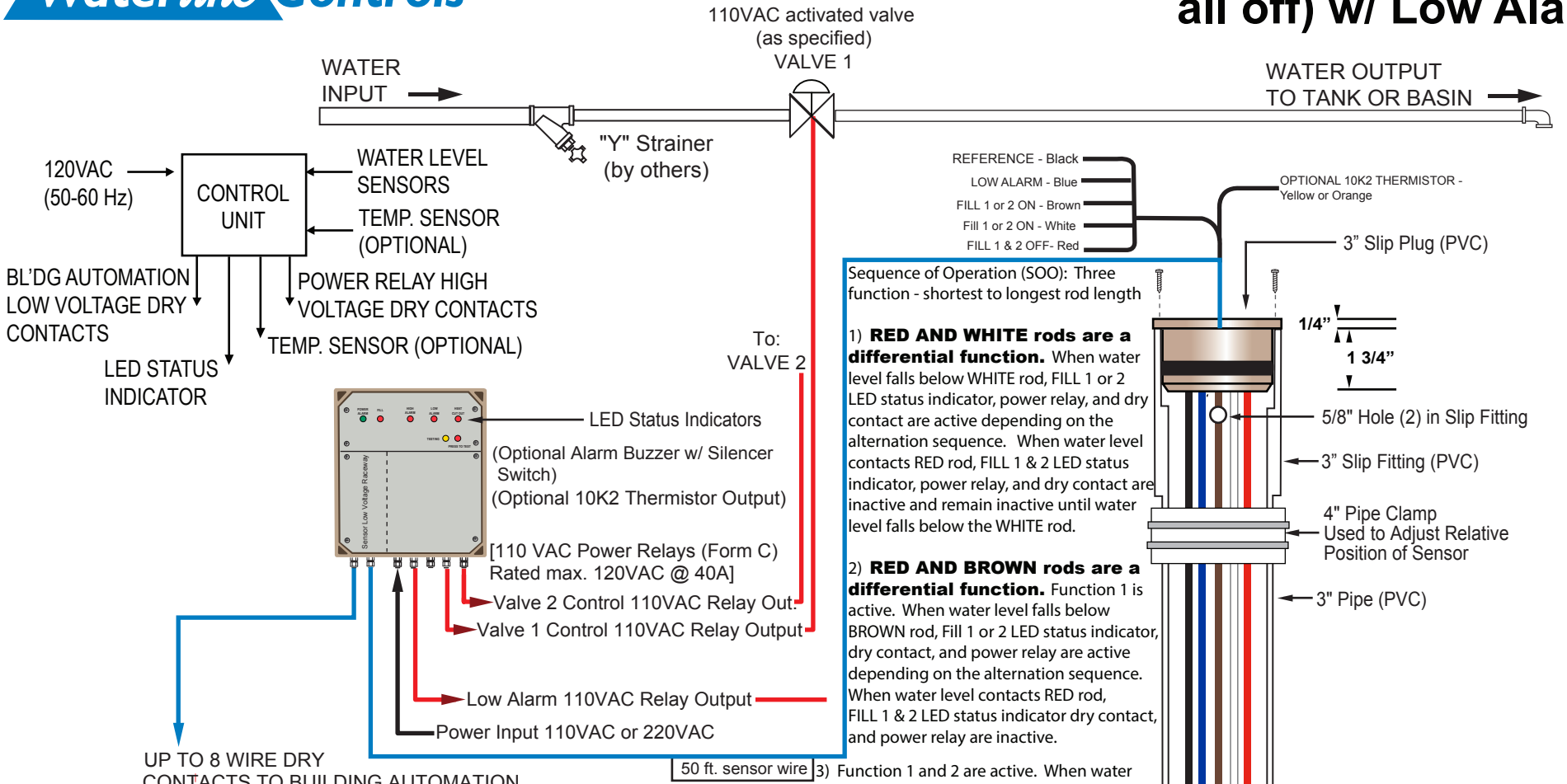

Sequence of Operation (SOO): Three function - shortest to longest rod length

1) **RED AND WHITE rods are a differential function.** When water level falls below WHITE rod, FILL 1 or 2 LED status indicator, power relay, and dry contact are active depending on the alternation sequence. When water level contacts RED rod, FILL 1 & 2 LED status indicator, power relay, and dry contact are inactive and remain inactive until water level falls below the WHITE rod.

2) **RED AND BROWN rods are a differential function.** Function 1 is active. When water level falls below BROWN rod, Fill 1 or 2 LED status indicator, dry contact, and power relay are active depending on the alternation sequence. When water level contacts RED rod, FILL 1 & 2 LED status indicator dry contact, and power relay are inactive.

3) Function 1 and 2 are active. When water level contacts Blue rod, LOW ALARM LED status indicator, dry contact, and power relay are inactive. When water level falls below BLUE rod, LOW ALARM LED status indicator, dry contact, and power relay are active.

UP TO 8 WIRE DRY CONTACTS TO BUILDING AUTOMATION SYSTEM - 2 wire connections for each function
2 wire connections for fault condition
Dry contacts are telay (Form A) SPST
See Product Function Truth Table for BMS Dry Contacts

1. 3" PVC pipe of length greater than or equal to length of longest rod
2. Adjust by moving 3" PVC Pipe upward/ downward, then tighten clamp

Waterline Controls
P.O. Box 12544 Scottsdale, Arizona 85260
Toll Free: 888-905-1892
Email: info@waterlinecontrols.com • www.waterlinecontrols.com

Electronic Water Level Management Systems

Lifetime Limited Warranty - Water*Line* Controls ®

The Lifetime Limited Warranty is extended to the original consumer purchaser of this WaterLine Controls manufactured by WaterLine Controls, Scottsdale, Arizona. WaterLine Controls warrants the unit, including all the parts and components thereof, to be free of defects in material and workmanship. This warranty does not cover plumbingor normal replacement items and parts, including gaskets and O-rings. WaterLine Controls does not cover improper installation of the unit or its parts, but our instruction manual is complete enough to solve any issues - particularly if the manual is read before rather than after the installation. If you have any questions including installation questions regarding your WaterLine Controls unit, please feel free to contact us. Be sure to include the serial number of your unit.

The Lifetime Limited Warranty commences on the date of installation. This electronic water level controller is covered by a Limited Lifetime Warranty. During the first year following installation, all parts will be repaired or replaced at No Charge to the original purchaser. After the first 12 months following installation, all repairs will be completed by the manufacturer at a maximum cost of $75 per repair for the lifetime of the original purchaser. This is the Lifetime Limited Warranty.

This Lifetime Limited Warranty does not apply if the failure is caused or contributed by any of the following: power failure or reduction of power supplied to the unit, unusualatmospheric conditions, improper handling, improper storage, winter freezing, abuse, improper installation, unsuitable application, lack of reasonable and necessary maintenance®, natural disasters, or repairs/alterations made or attempted by other than WaterLine Controls or an Authorized Technician approved by WaterLine Controls. WaterLine Controls will repair or replace, at its option, a unit or part proved to be defective within the warranty period and under the conditions of this Lifetime Limited Warranty.

Water*Line* Controls • PO Box 12544 Scottsdale • Arizona 85260
© SDI 2017

The consumer must deliver or ship the unit or Warranty parts freight prepaid to WaterLine Controls. Authorization to return an item to WaterLine Controls must be obtained from WaterLine Controls Customer Service Department at 888-905-1892. For further assistance with this process please contact the Customer Service Department. Be sure you insure your shipment against loss or damage in transit.

WaterLine Controls is not responsible for the cost of removal of the unit or parts of the unit, damages due to removal, or any other expenses incurred in shipping the unit or parts to or from WaterLine Controls or its closest Authorized Service Center or the installation of the repaired or replaced unit. The consumer must bear these expenses.

THIS LIFETIME LIMITED WARRANTY IS IN LIEU OF ALL OTHER WARRANTIES, EXPRESSED OR IMPLIED, INCLUDING THE IMPLIED WARRANTIES OF MERCHANTABILITY AND FITNESS FOR A PARTICULAR PURPOSE AND ALL SUCH OTHER WARRANTIES ARE DISCLAIMED EXCEPT TO THE EXTENT ANYIMPLIED WARRANTY MAY BE IMPOSED BY STATE CONSUMER LAW. ANY SUCH IMPLIED WARRANTY IMPOSED BY STATE CONSUMER LAW IS LIMITED IN DURATION TO ONE (1) YEAR FROM THE DATE OF INSTALLATION. IN NO EVENT SHALL WATERLINE CONTROLS BE LIABLE FOR INCIDENTAL OR CONSEQUENTIAL DAMAGES OR ANY NATURE OR KIND OR FOR DAMAGES TO PERSONS OR PROPERTY, INCLUDING ANY DAMAGE RESULTING FROM THE USE OF THE UNIT WITH A SUBSTANDARD WATER CIRCULATION OR SUPPLY SYSTEM.

Some states do not allow limitations on how long an implied warranty lasts, or the exclusion or limitation of incidental or consequential damages, so the above limitations may not apply to you.

This limited warranty is valid only in the United States of America and Canada