Electronic Water Level Management Systems

Install instructions for Model WLC6100T Level Controller

Waterline Controls is the optimum choice for any situation requiring the precise control of a water level. It is ideal for automatically maintaining the correct level in cooling towers, storage tanks, or process water applications.



Waterline Controls Model WLC6100T achieves control by the use of a corrosion resistant probes that sense the water level and then in conjunction with electronics and a microprocessor, provides signals that can be used to open/close valves and other control or recording devices thus maintaining correct levels. The WLC6100T also has a temerature sensor that turns on a heater relay when the water temperature falls below 40˚ F. thus preventing freezing, if the water level falls below a safe level, the heater is disabled.

IMPORTANT SAFETY INSTRUCTIONS

1. Call the factory with any questions. 1-888-905-1892 or write to: System Dynamics, P.O. BOX 12544, Scottsdale, AZ 85260
2. Read and follow all instructions.
3. Disconnect all power before opening the internal cover/s or making any connections to the unit.
4. Do not install in locations where sprinklers or other watering devices will allow water to impinge on the unit.
5. Sensor wires must be continuous and not spliced.
6. Make sure the unit is connected properly to earth ground.
7. Only qualified personnel should install this unit or replace the "replaceable" parts.
8. Only factory supplied parts should be used whenever a replaceable part is needed.
9. The manufacture will not be liable for any injury or damage that may arise from the misuse of this unit or from failure to follow all of these instructions.
10. Save these instructions and provide them to the end user.
11. This unit shall not be used in any "safety critical" application or where the failure of any function or component may cause death or personal injury.
11. Ne pas utilisez cet élément quand les blessures oú la mort peuvent les présenter.
12. Use copper (CU) wire only for all connections.

Levolor® is a registered trademark of Jandy Pool Products, Inc. and used under license only. SDI and Jandy Pool Products, Inc. are not affiliated companies.
Waterline Controls is a registered trademark of SDI.

© SDI 2011

Electronic Water Level Management Systems

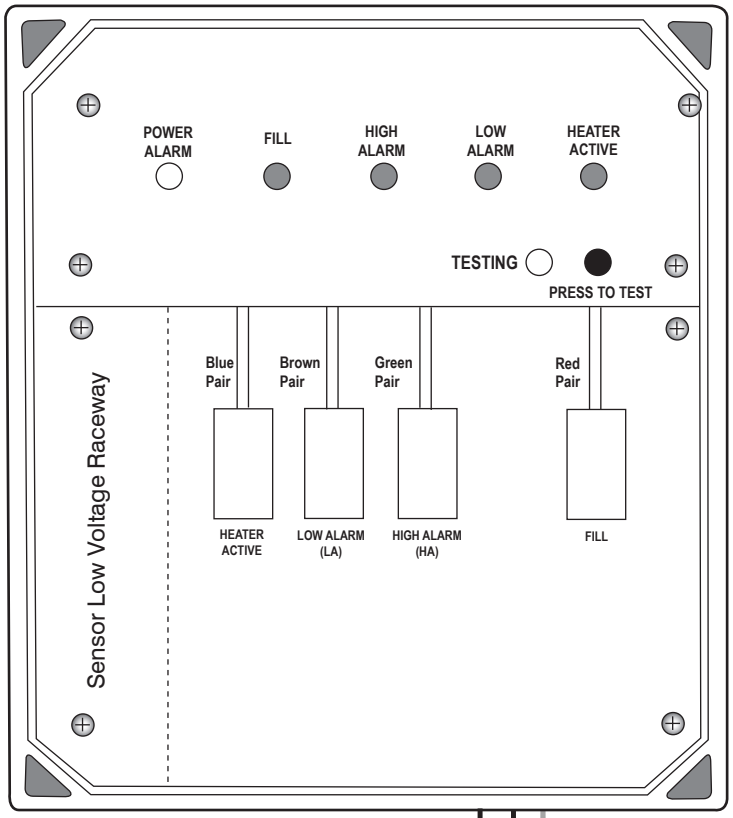

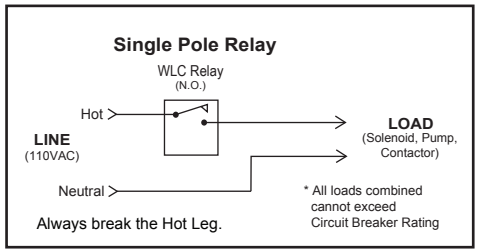

"Bottom plate removed in illustration."

Figure 1.
WLC6100T

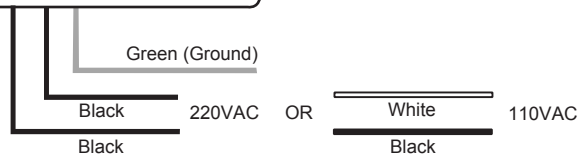

The "replaceable" parts are:

- Waterline Control CONTROLLER — part # WLC6100T with option110 or 220 vac (specify option: 110 or 220 VAC)
- Stainless steel probe assembly — See Sensor assembly appendix.
- Power relay — part # PG8P
- U Bolts/nuts U20P5-9
- Mounting bracket MB2

The unit is powered by either 110 VAC or 220 VAC 60 HZ 0.5 Amp. The input voltage is determined by the option selected. If the 110 VAC option is selected, then the input power wires are: one black and one white. If the 220 VAC option is selected, then the two input power wires are both black.

The unit is rated for indoor or outdoor installation.

These power relays may be used to control valves, or solenoids: but not motors. There are also low power SPST relays whose contacts are rated at 50 VAC/DC 0.25 Amp. that can be used as an additional indicator or to provide an indication to an event recorder, computer or automation system. These "Dry Contact" relays operate in tandem with the LED's.

The normal indicator on the unit is a green LED that is a "power ON" indicator and is on whenever power is applied to the unit. This LED will either flash red (at a 1 second rate) when a sensor wire is shorted to ground or open circuited or show red constantly for one minute when the "Fill" relay has been at Fill command (on continuously) for 6 hours. There are also other LED's that turns ON whenever the relay contacts are closed which deactivates the heater. These indicate a very low water level condition, a low water condition, a Fill condition or a high fill water level condition. These will remain ON until the level changes to some other level. The contact with the water is sensed by the electronics and the microprocessor then provides the necessary control for the various outputs.

The parts supplied are:

1- The Waterline Control CONTROLLER.
1- Stainless steel probe assembly with 50 feet of wire.
2 -U bolts with nuts.
1- Mounting bracket.
* Power Relays (as required)

© SDI 2011

SENSOR ASSEMBLY INSTALLATION

The Waterline WLC6100T should be mounted in a covenant location where water spray will not impinge upon the unit and at a height consistant with figure 2. The unit and the input/output cabling must be securely attached to the mounting surface.

The sensor assembly (see Figure 2) must be mounted so that the end of the PVC pipe is below the minimum water level that is to be maintained. Secure the probe assembly to a suitable mounting surface with the correct size "U" (U2OP5-9) bolts and the mounting bracket (M2OP5-9). Be careful to insure that the top portion of the assembly is not in contact with the water and that the "U" (U2OP5-9) bolts are above the high water level. Note: There are two small 1/8 inch vent holes near the top of the housing in the PVC pipe. Make certain this vent holes are not obstructed in any way. They must be clear in order for the sensor assembly to function properly.

The probe assembly is supplied such that it has the sensor cable pre-installed. Route the cable along an appropriate location and determine if the length needs to be shortened. The wire may be cut to a shorter length if required.
NOTE: THE SENSOR WIRES MUST NOT BE SPLICED IN ORDER TO INCREASE THE LENGTH. DO NOT ROUTE NEAR OTHER POWER CABLES.

Fasten the wire to a water tight PVC compression connector and then install into the bottom of the Waterline WLC6100t housing. output control wires are connected to the relays output terminals using (¼ inch spade) connector supplied by the user.
NOTE: the rating on the relay should not be exceeded.

Use water tight PVC conduit for all connections and route the location desired by the end user.

If the depth of the probes need to be seen while the sensor assembly is installed mark the sensor probe levels on the outside of the pipe with a "Sharpie". The center of the nominal fill level is marked with a black button in the outer pipe.

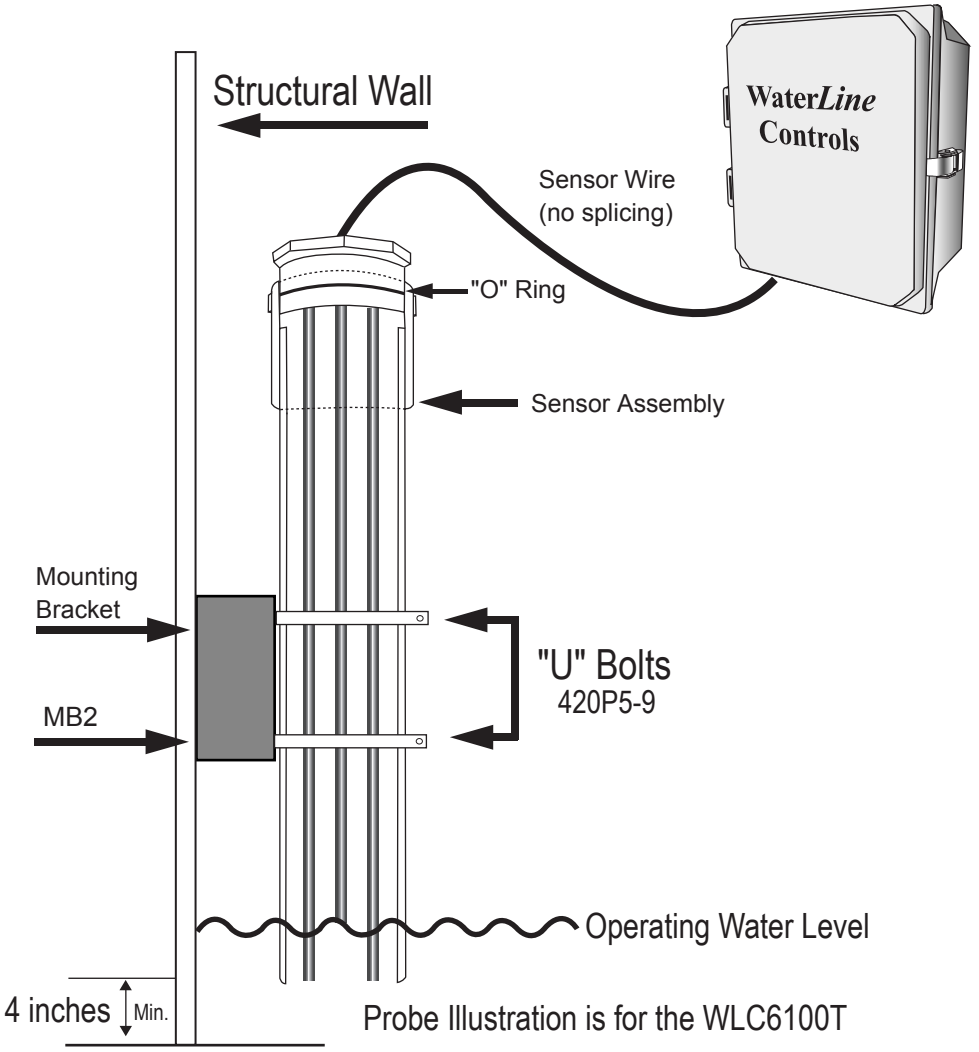

Figure 2.

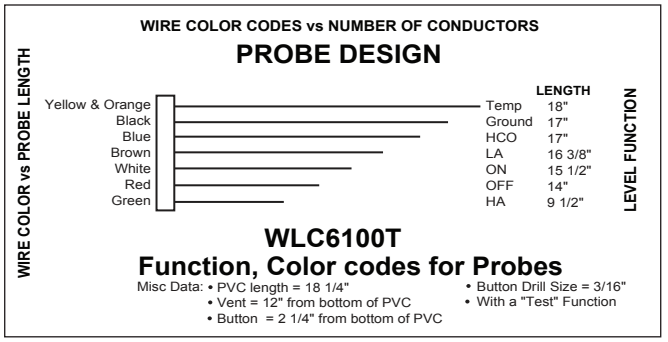

TEST INSTRUCTIONS

The following test procedure will test the electronics and output relay functions. The test verifies all of the electronics from the location of the sensor wire connection to the PCB through the output relays. It verifies the functions of the Waterline WLC6100T.

THIS TEST IS VALID FOR THE WLC6100T. To initiate the test, perform the following:
1. Press the "PRESS TO TEST" push button momentarily. The yelllow LED will light and remain on until the "test function" is completed.
2. The controller automatically sequences through the functions.

Note: once the "PRESS TO TEST" button is depressed the test sequence cannot be interrupted. This test will take approximately 2 minutes.

The functions of the LED's, the power relays and the indicator relays are shown in the following truth tables.

TESTING TRUTH TABLE

TEST SEQUENCE	HEATER	LOW ALARM	MAKE UP ON	HIGH ALARM
1	ACTIVATED	OFF	OFF	OFF
2	OFF	ACTIVATED	OFF	OFF
3	OFF	OFF	ACTIVATED	OFF
4	OFF	OFF	OFF	ACTIVATED

FUNCTION TRUTH TABLE

MODEL	HEATER	LOW ALARM	HIGH ALARM	FILL	TEST FUNCTION
WLC6100T	YES	YES	YES	YES	YES

DEFINITIONS

HEATER DEACTIVATED: The water level is below the safe operating level.

HEATER ACTIVATED: Temperature is less that 40° F and water is above the safe operating level.

LOW ALARM: The water level is approaching the unsafe level.

MAKE UP ON: The system is calling for water to be added.

HIGH ALARM: The water level is approaching the maximum allowed level.

BUILDING AUTOMATION DRY CONTACTS

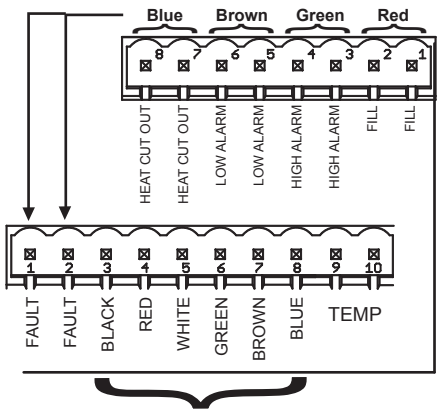

SENSOR PROBE WIRES

The "Dry Contacts" are included in the design of the WaterLine Controler as an aid to the proper controlling of the building automation system.

Their function is as follows:
For each controller function (for example the WLC6000) HEATER, LOW ALARM, FILL, and HIGH ALARM there is a corresponding "Dry Contact" that changes from an open circuit to a closed circuit whenever the corresponding relay is activated. The Dry Contacts are rated at 50 VDC @ 0.25 Amp. Other controller series may have a different number of Dry Contacts but they always have the same number as the number of relays; thereby affording the proper signals to be made available to the building automation system.

The Fault contacts tell the operator when the unit has filled for six hours or if the sensors have debris on them.

© SDI 2011