# SPECIFICATION FOR WLC6000 FILL WITH HIGH LEVEL ALARM, LOW LEVEL ALARM, & LOW-LOW LEVEL HEAT CUT-OFF

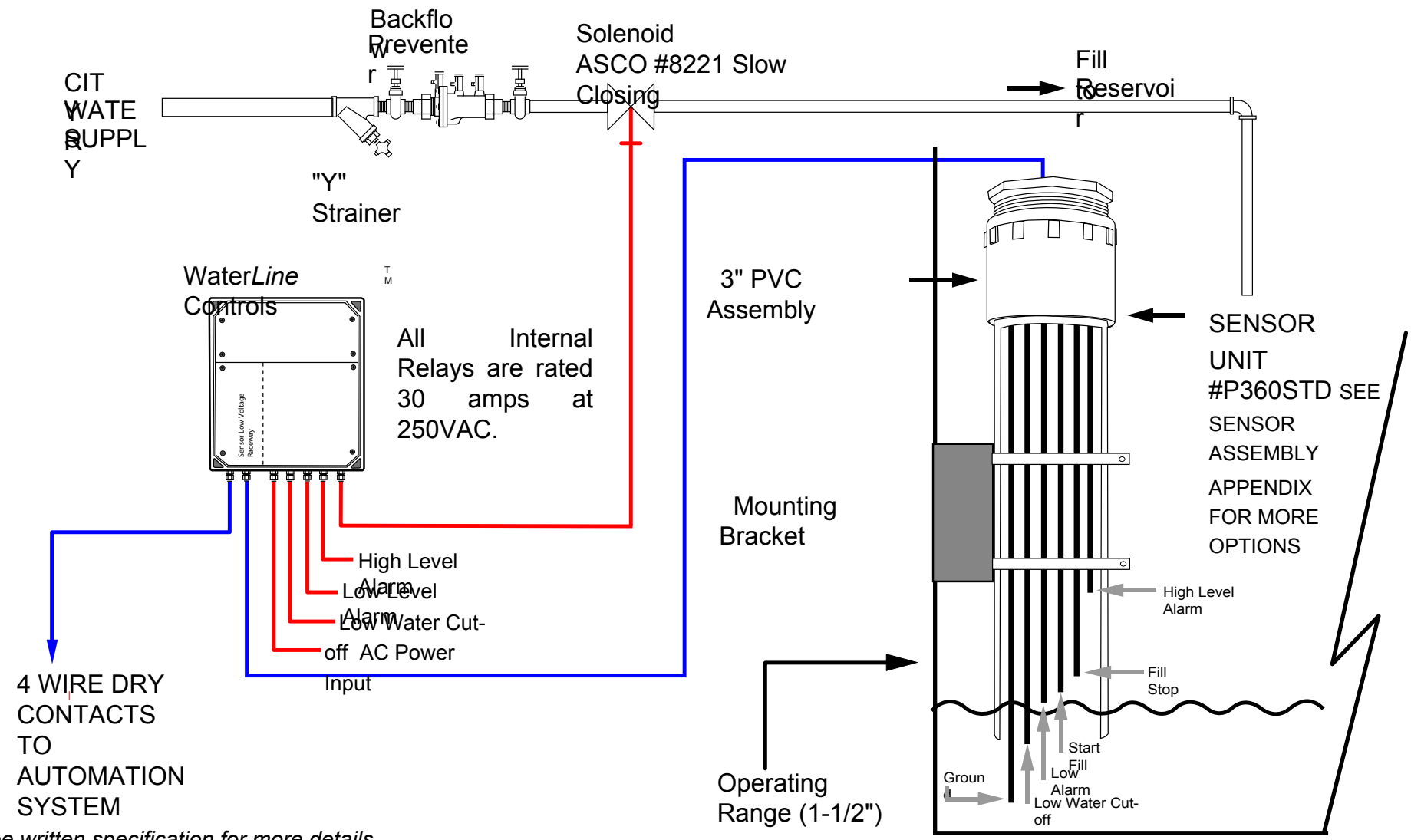


* *See written specification for more details.*

Copyright 2008, SYSTEM DYNAMICS INC.

| | | | | | | | |
|---|---|---|---|---|---|---|---|
| Blue lines are low voltage<br>Red lines are high voltage | | ELECTRONIC LEVEL CONTROL | | | This document contains information Proprietary and confidential to SYSTEM DYNAMICS INC. It shall not be reproduced, copied or made available to others without prior written consent from SYSTEM DYNAMICS INC. | SYSTEM DYNAMICS, INC.<br>PO Box 12544 Scottsdale, Arizona 85260<br>1-888-905-1892<br>www.waterlinecontrols.com | DRAWING NO. / REV. |
| DATE / REVISION BY | | APPROVED: | DWG. REF.: | NOT TO SCALE | S.O. # | | |
| | | CHECKED: | DRAWN: | DATE: | P.O. # | | SHEET OF |